niftylift

150T

(A)	14.7m 48ft 6in
(B)	12.7m 42ft
(C)	7.55m 25ft
	225kg 500lbs
	1.4m x 0.7m 4ft 7in x 2ft 4in
(D)	2m 6ft 7in
(E)	1.6m 5ft 3in
(F)	3.8m 12ft 6in
(G)	5.55m 18ft 3in
	✓
	1775kg 3915lbs
	23% 13°
	Bi-Energy

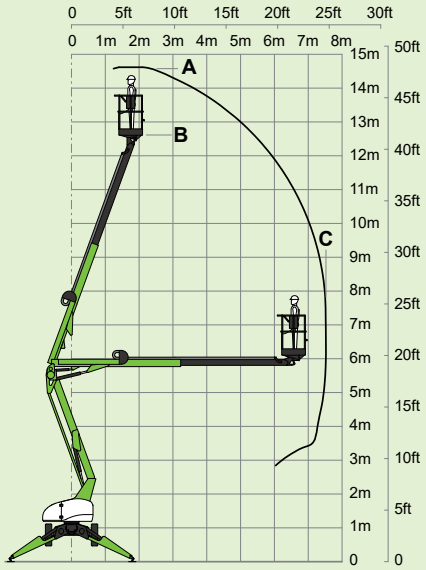

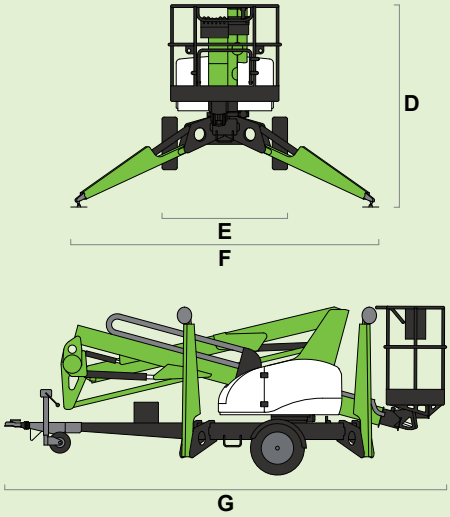

niftylift

Chalkdell Drive, Shenley Wood,
Milton Keynes, MK5 6GF
England, United Kingdom
+44 1908 223456
sales@niftylift.com
www.niftylift.com

ISO 9001	ISO 14001	ISO 45001
QUALITY MANAGEMENT	ENVIRONMENTAL MANAGEMENT	HEALTH & SAFETY MANAGEMENT

IS-108